The 6th International Conference on
Structural Health Monitoring of Intelligent Infrastructure
Hong Kong | 9-11 December 2013

STRUCTURAL HEALTH MONITORING SYSTEM OF STEEL-TUBE ARCH BRIDGE: DESIGN AND IMPLEMENTATION OF A TEACHING DEMONSTRATION PLATFORM

Yi-qiang Xiang [1,2], Xiao-wei Ye [1], Li-chang Zhang [1] and Xiao-yang He [1]
[1] Department of Civil Engineering, Zhejiang University, Hangzhou 310058, China.
Email: cexwye@zju.edu.cn
[2] Cyrus Tang Center for Sensor Materials and Applications, Zhejiang University, Hangzhou 310058, China.

ABSTRACT

With the aid of the modern sensing technology, computer network and communication technology, and experimental analysis technology, the structural health monitoring (SHM) system has been a kind of important means to display real-time dynamic structural information and ensure the safety of the structure. In the past decade, worldwide applications of SHM systems on large-scale engineering structures have been emerged. As a cutting-edge civil engineering research field, the SHM technology is a synergy of a variety of knowledge of engineering disciplines such as civil engineering, electronic and electrical engineering, optical engineering, computer science, and software engineering. Apart from the in-depth research activities, the SHM-related courses with experimental teaching programs are eager to be constructed for the promotion and popularization of the SHM theories and practices. In this paper, an SHM-oriented teaching demonstration platform developed by the Department of Civil Engineering, Zhejiang University, China is introduced. A scale arch bridge model is designed and fabricated for instrumentation of different kinds of sensors for measurement of the environmental factors, external loadings, and structural characteristics and responses. A finite element model of the scale arch bridge model is established and the static and dynamic structural analysis is conducted for determination of the sensor installation locations. Finally, the results of the static and dynamic structural responses of the scale arch bridge model through finite element analysis are also presented.

KEYWORDS

Structural health monitoring, steel-tube arch bridge, scale model, sensors, finite element analysis.

INTRODUCTION

An experimental education platform of bridge health monitoring has been implemented in the Department of Civil Engineering, Zhejiang University, China. This teaching demonstration platform aims at cultivating the creativity and practical capability of the undergraduate and postgraduate students majored in bridge engineering and promoting the structural health monitoring (SHM) technology to the students being interested. To this goal, a half-through steel-tube arch bridge with a main span of 6 m and deck width of 1.5 m was designed and fabricated as a scale model testbed. Various types of novel sensors such as piezoelectric sensors, optical fiber sensors, vision-based sensors, and wireless sensors will be instrumented on the predesignated key locations determined through establishing a finite element model together with a detailed structural analysis. The architecture of the sensor networks and the topology of the data acquisition and transmission are being formulated in accordance with the situation of the experimental site and the monitoring scheme. A multi-functional customized software with a user-friendly interface will be developed for ease operation and interactive visualization.

Furthermore, a self-made test bogie was fabricated and used to simulate the moving loadings alike the highway traffic on the real bridge. Apart from the self-weight of the test bogie, the steel blocks with a known mass can be imposed on the test bogie to be as the additional weight during the moving loading experiments, and also the velocity of the test bogie can be adjusted. In addition to the specific teaching activities, taking this scale model of steel-tube arch bridge as a testbed, a variety of investigations can be conducted such as the performance appraisal of newly-developed sensors, comparative study of different structural damage detection methods, verification of optimal sensor placement algorithms, and data mining/fusion with various types of measurement data (Jing and Xiang 2006; Jing and Xiang 2007; Jing *et al*. 2008; Xiang and Wang 2006; Xiang and Li 2009; Xiang *et al*. 2009; Xiang *et al*. 2013).

SCALE ARCH BRIDGE MODEL AND MONITORING SYSTEM

Design and Fabrication of Scale Arch Bridge Model

Two main arch ribs with a rise-to-span ratio of 4.21 are made of seamless circular tubes with a diameter of 70 mm and wall thickness of 5 mm. The longitudinal beams and crossbeams of the bridge deck system are assembled by rectangular steel tubes. There are three longitudinal beams installed in the bridge deck system, and two side ones are supported at the junction of the arch ribs by the rigid crossbeams whose ends are welded on the arch ribs. The length of the crossbeam in the longitudinal direction is 610 mm, and the distance between the rigid crossbeam on the arch ribs and the adjacent crossbeam is 692 mm. The bridge deck is overhanged by suspenders which are made of steel wire ropes with a diameter of 3 mm. 7 pairs of suspenders whose ends are anchored to the arch ribs and the side longitudinal beams are installed symmetrically with respect to the midspan. For convenience of disassembility and installation, three transverse wind braces are installed at the vault and quarter points to ensure the lateral stability and stiffness of the scale arch bridge model, which are made of seamless steel tubes with a diameter of 38 mm and wall thickness of 4 mm. Two stand columns and two inclined columns bracings which are connected by the rectangular steel tubes with a side length of 40 mm and wall thickness of 4 mm are installed at the arch foot as the transition between the deck system and the platform. The material of all the steel tubes is grade Q345. The schematic of technical drawings of the scale arch bridge model is illustrated in Figure 1. Figure 2 shows the photos of the scale arch bridge model.

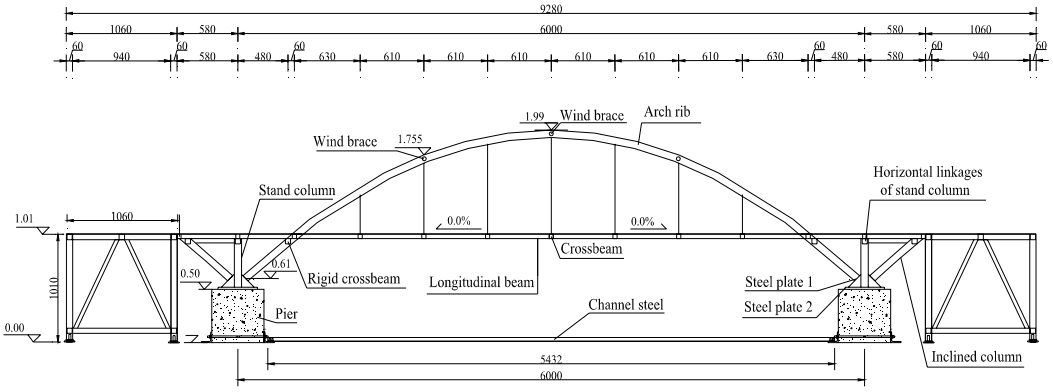

(a) Front view

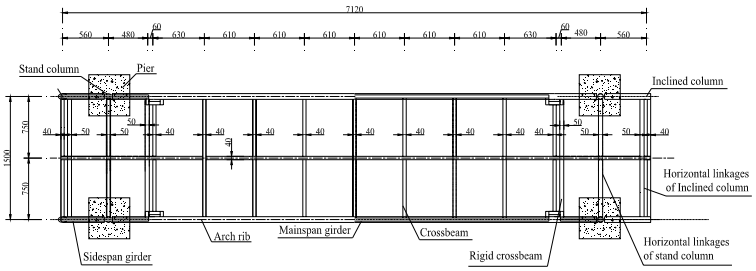

(b) Top view

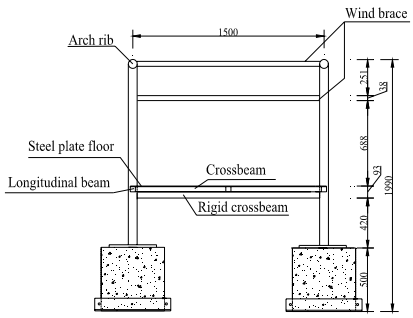

(c) Side view

Figure 1. Schematic of technical drawings of scale arch bridge model (unit: mm)

Figure 2. Photos of scale arch bridge model

Monitoring of Static and Dynamic Structural Properties

A finite element model of the scale arch bridge model has been established by using the commercial software MIDAS (will be described in the next section). Through static and dynamic structural analysis, the achieved results of structural responses were used for the reference of determining the locations for senor installation. As illustrated in Figure 3, the monitoring categories contain environmental factors, external loadings, and structural characteristics and responses. Diversiform novel sensors will be deployed on the scale arch bridge model for capturing experimental data under the condition of static and dynamic loadings. For instance, the embeddable piezoelectric sensors have been installed in one of the bridge piers for impact loading tests. The self-made fiber Bragg grating (FBG)-based sensors for cable force measurement will be developed and installed on the steel wire ropes. The deformation of the main arch ribs and the bridge deck system will be measured by use of the conventional contact-type electrical displacement sensors and a vision-based displacement sensor, respectively. Two rail tracks are set on the bridge deck and two four-wheels bogies were designed and manufactured to simulate the vehicle dynamic loadings on the steel-tube arch bridge, as illustrated in Figure 4.

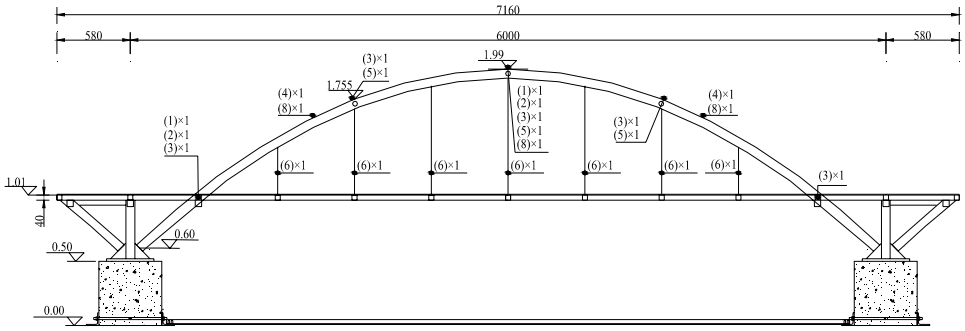

(a) Front view

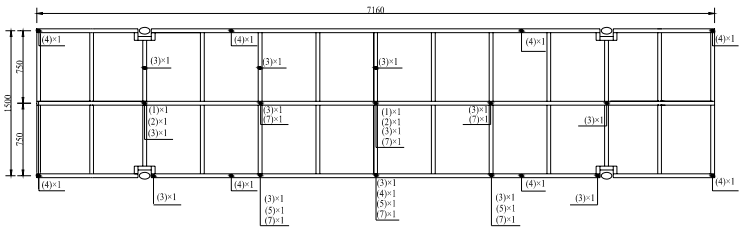

Number	(1)	(2)	(3)	(4)	(5)	(6)	(7)	(8)
Sensor	Fiber-optic temperature sensor	Fiber-optic strain sensor	Resistance strain gage	The vertical acceleration sensors	The lateral acceleration sensor	Fiber-optic cable force sensor	Displacement sensor	LED light source

(b) Top view

Figure 3. Deployment of sensors on scale arch bridge model (unit: mm)

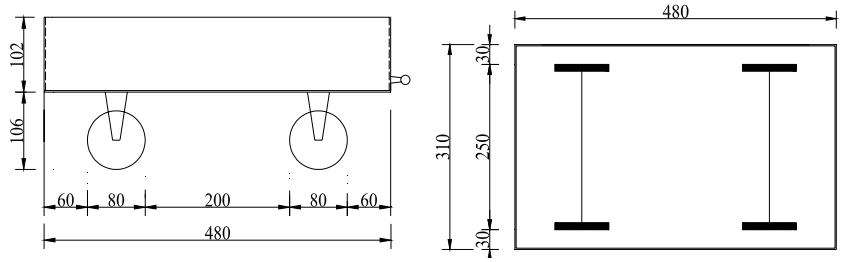

(a) Front view (b) Top view

Figure 4. Schematic of test bogie (unit: mm)

FINITE ELEMENT ANALYSIS OF SCALE ARCH BRIDGE MODEL

Spatial beam elements and truss elements were adopted in modeling of the scale arch bridge, as illustrated in Figure 5. The established finite element model has 412 elements and 307 nodes. The boundary condition at the arch foot is a clamped support, and the elastic connection is adopted between the rigid transverse beam and the bridge deck. Figures 6 give the static structural responses of the arch rib (axial force, bending moment, stress, and deflection) under the dead load. Figure 7 shows the first four natural frequencies and the corresponding vibration modes of the scale arch bridge model.

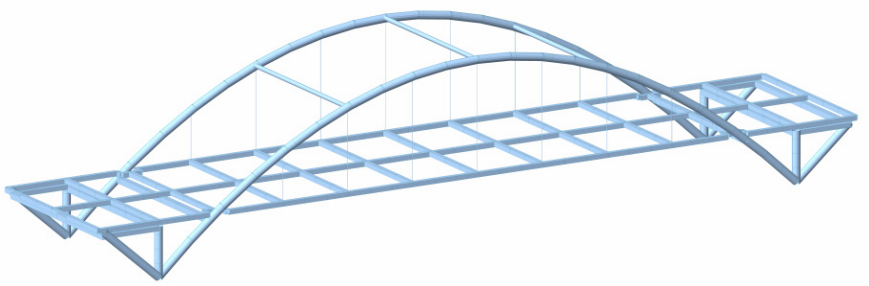

Figure 5. Finite element model of scale arch bridge

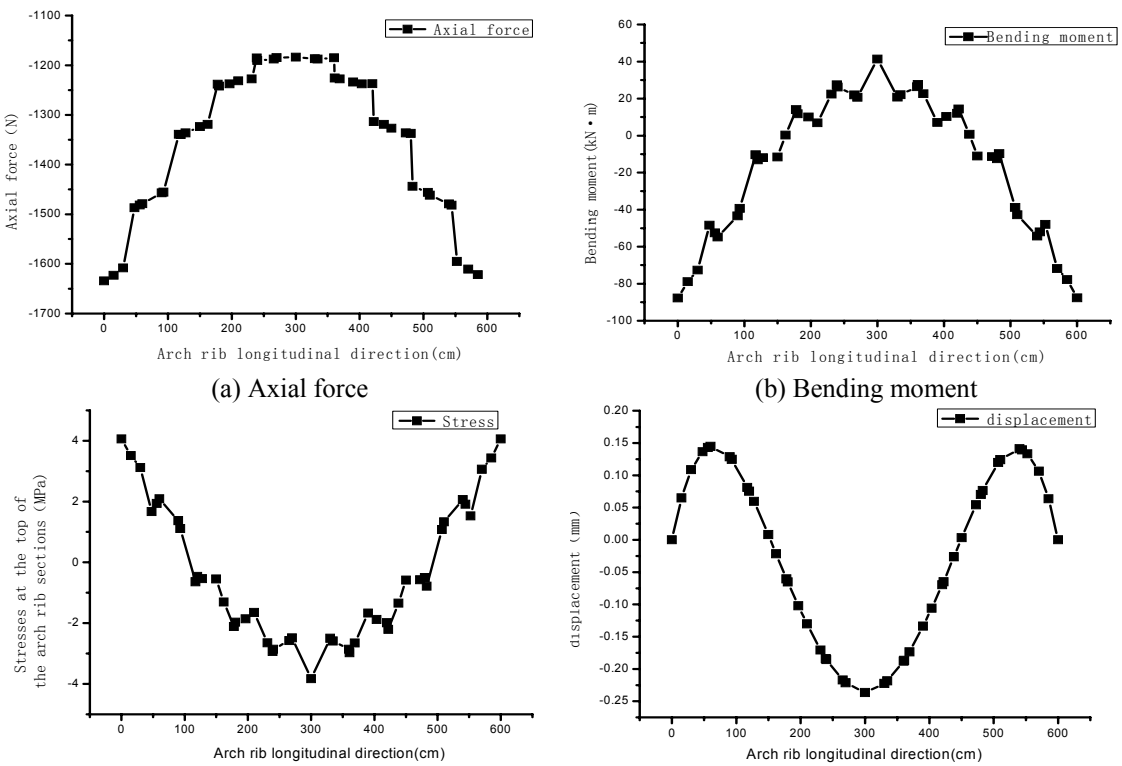

(a) Axial force (b) Bending moment

(c) Stress (d) Deflection

Figure 6. Structural responses of arch rib under dead load

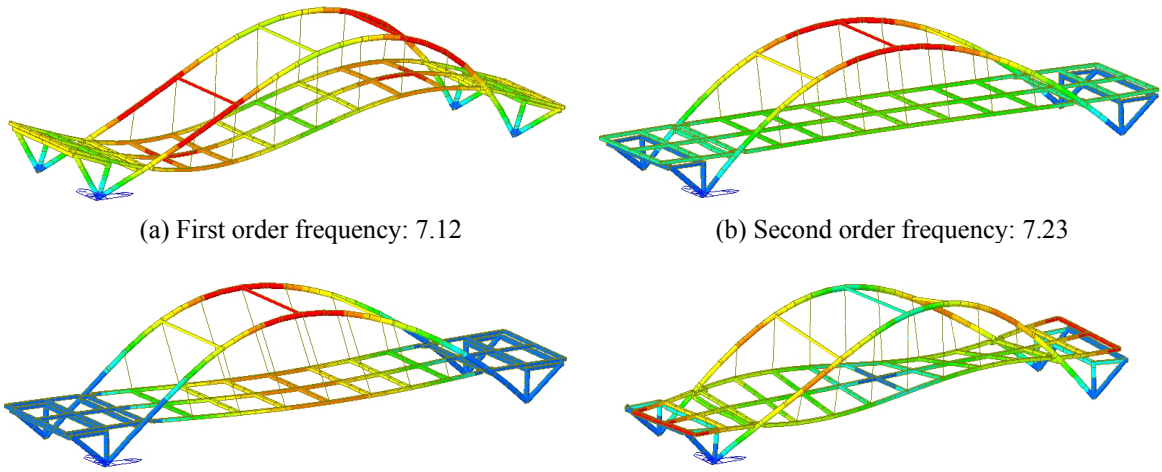

(a) First order frequency: 7.12 (b) Second order frequency: 7.23

(c) Third order frequency: 12.56 (d) Fourth order frequency: 13.23

Figure 7. Dynamic properties of scale arch bridge model

CONCLUSIONS

In this paper, an SHM-oriented experimental education platform developed by the Department of Civil Engineering, Zhejiang University, China has been introduced. With the help of such a teaching demonstration platform, the state-of-the-art and state-of-the-practice knowledge of the SHM technology can be promoted and popularized to the undergraduate and postgraduate students majored in bridge engineering. A significant number of novel sensors in various types such as piezoelectric sensors, optical fiber sensors, vision-based sensors, and wireless sensors will be deployed on a scale arch bridge model. A finite element model of the scale arch bridge model was established for detail structural analysis under static and dynamic loading conditions. The critical locations for sensor installation were determined with the results of structural responses. The developed teaching demonstration platform will facilitate and push forward the interdisciplinary cooperation and integration within the civil engineering and other relevant engineering disciplines such as electronic and electrical engineering, optical engineering, computer science, and software engineering.

ACKNOWLEDGEMENTS

The work described in this paper was supported by the Cyrus Tang Fund of Zhejiang University, and the Fundamental Research Funds for the Central Universities under Grant No. 2013QNA4023.

REFERENCES

Jing, L.J. and Xiang, Y.Q. (2006). "Study on sensitivity of modal parameters used in structure damage identification of bridge", *Proceeding of 4th China-Japan-US Symposium on Structural Control and Monitoring*, 16-17 October, Hangzhou, China (CD-ROM).

Jing, L.J. and Xiang, Y.Q. (2007). "Study on damage identification of main girders for a large-span cable-stayed bridge based on modal analysis", *China Railway Science*, 28(6), 54-59.

Jing, L.J. and Xiang, Y.Q. (2008). "Study on damage identification of main girders for long span cable-stayed bridge based on flexibility matrix", *Journal of Zhejiang University (Engineering Science)*, 42(1), 164-169.

Xiang, Y.Q. and Li, Y. (2009). "Healthy monitoring and altering system on-line of bridge structures I: Design for monitoring assessment, altering system and modules", *Journal of Transport Science and Engineering*, 25(1), 26-31.

Xiang, Y.Q., Liu, L.S. and Li, S.J. (2013). "Accurate FEM of steel-concrete composite box girder bridge for damage identification based on dynamical experimental study", *Applied Mechanics and Materials*, 330, 872-877.

Xiang, Y.Q. and Wang, J.F. (2006). "Advance in health monitoring and assessment theory of long span concrete bridge and application" *Proceedings of 4th China-Japan-US Symposium on Structural Control and Monitoring*, 16-17 October 2006. Hangzhou, China (CD-ROM).

Xiang, Y.Q., Zhou, C. and Li, Y. (2009). "Healthy monitoring and altering system on-line of bridge structures II: Signal analysis and extraction methods for damage identification", *Journal of Transport Science and Engineering*, 25(2), 33-39.